No. 513,514, 514R Stock, Box & Reefer Cars

LIONEL ELECTRIC TRAINS
MODEL RAILROAD ACCESSORIES
LIONEL CORPORATION TINPLATE
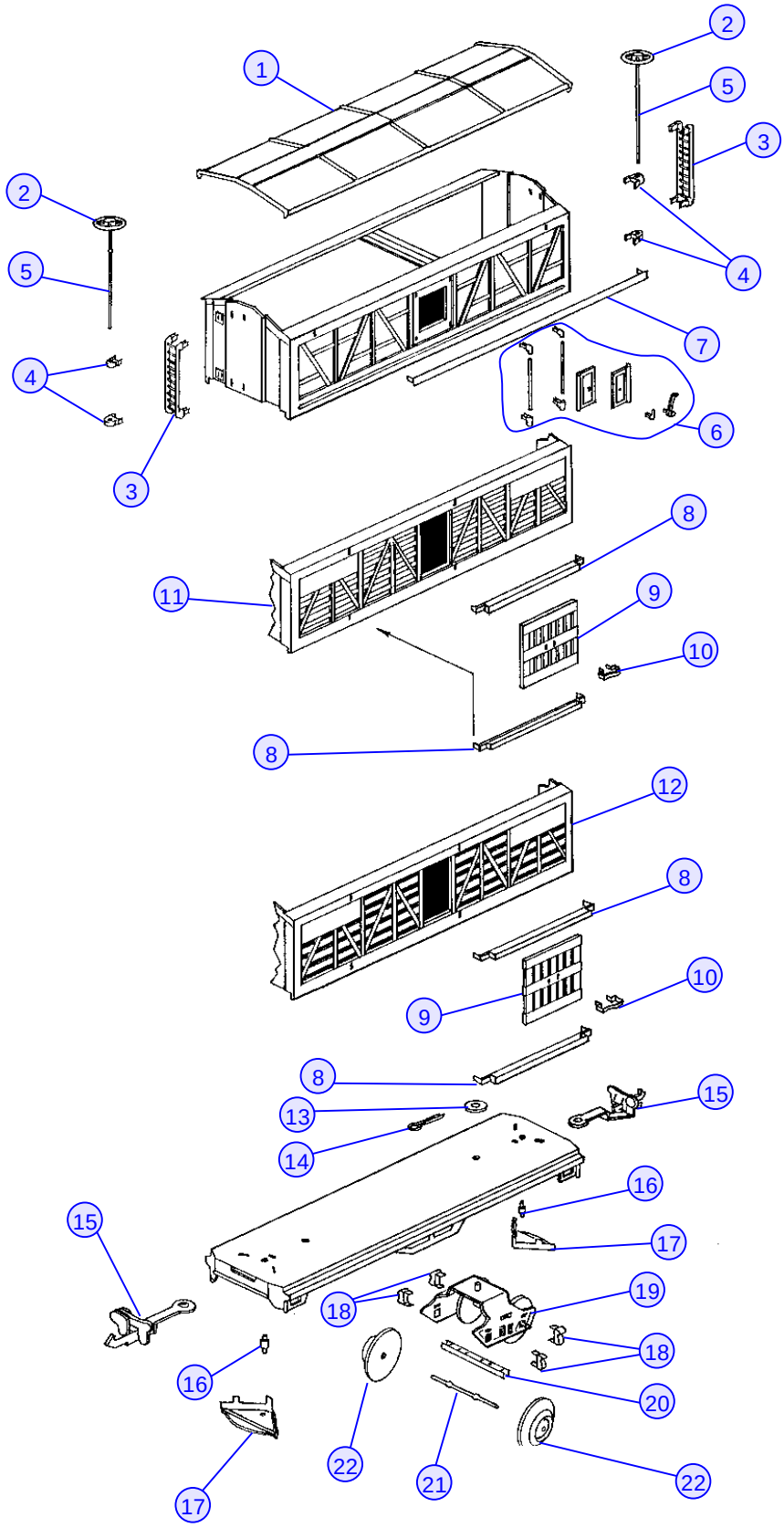
1. TP-SF00080 - Roof
2. TP-MS00010
   Brakewheel (Brass) w/ Caps
   TP-MS00011
   Brakewheel (Nickel) w/ Caps
3. TP-SF00044 - Ladder (Brass)
   TP-SF00045 - Ladder (Nickel)
4. TP-SF00017
   Brake Wheel Stanchion (Brass)
   TP-SF00018
   Brake Wheel Stanchion (Nickel)
5. TP-SF00019
   Brake Wheel Shaft (Brass)
   TP-SF00073
   Brake Wheel Shaft (Nickel)
6. TP-SF00088
   Door Reefer (Nickel) Complete Set with Latches
   TP-SF00032
   Door Reefer (Brass) Complete Set with Latches
7. Undefined
8. TP-SF00031- Door Runner
9. TP-SF00030 - Door (Cattle Car)
10. TP-MS00028
    Door Handle (Brass)
    TP-MS00029
    Door Handle (Nickel)
11. Undefined
12. Undefined
13. TP-OT00028 - Washer
14. TP-ST00013 - Cotter Pin
15. TP-MS00020
    Coupler Long Shank w/Spring
16. TP-MS00026 - Coupler Pin
17. TP-MS00025 - Coupler Pocket
18. TP-MS00041
    Journal Brass
    TP-MS00042
    Journal Nickel
    TP-MS00043
    Journal Copper
19. TP-ST00028 - Truck w/o Pickup
20. TP-ST00036 - Truck Crossbrace
21. TP-ST00010 - Axle
22. TP-ST00038 - Wheel